Owner Manual
Operating Instructions

LINCOLN®

3.1A-48001-C03

Pneumatic barrel pumps Model SAF1-YL and SAF2-YL

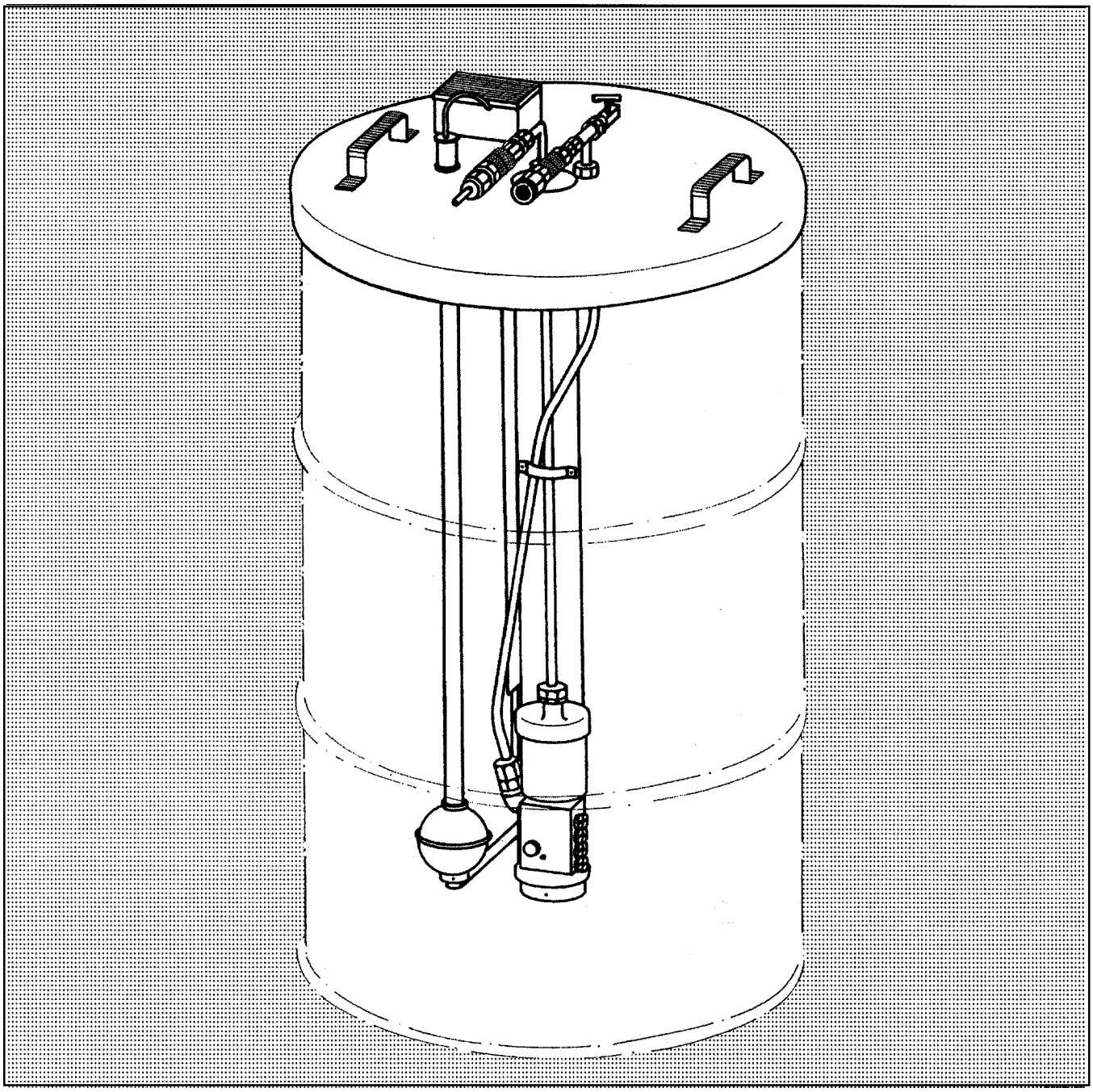

1080a94

Subject to change without notice

LINCOLN GmbH & Co. KG • Postfach 1263 • D-69183 Walldorf • Tel +49 (6227) 33-0 • Fax +49 (6227) 33-259

Preface to the Owners Manual

This Owner Manual is intended to familiarize the owners with the pump/lubrication system and to make him know the appropriate possibilities of use.
The Operating Instructions refer to important directions for a safe, adequate and rentable operation of the pump/lubrication system. Their observance will help avoid hazards, reduce repair costs and downtimes and increase the reliability and life of the pump/lubrication system.
These Operating Instructions must be completed with the respective national regulations concerning the prevention of accidents and protection of the environment.

The Owners must always be available on the site where the pump/lubrication system is in operation.

If persons who are charged with works on the pump/lubrication system don't have a good command of the english language, it is the owners's responsibility to take the necessary actions to make the Owners Manual, particularly the Operating Instructions, understandable to these persons.

The Owners Manual must be read and used by all persons who are charged with works on the pump/lubrication system, e.g.

- **Operation**, including adjustment, troubleshooting during operation, elimination of production waste, maintenance, disposal of process materials
- **Maintenance** (inspection, repairs)
- **Transport**

Table of Contents

LINCOLN GmbH & Co. KG • Postfach 1263 • D-69183 Walldorf • Tel +49 (6227) 33-0 • Fax +49 (6227) 33-259

1 Safety Notes

The Operating Instructions include general instructions which must be followed when a pump/pump unit is installed, operated or serviced. Therefore, it is absolutely necessary for the fitter and the specialist/owners to read the Operating Instructions before a unit is installed and commissioned. The Operating Instructions must always be available on the site where the machine/system is erected.
All general safety instructions contained in this main Safety chapter have to be observed as well as all special safety instructions given in other main chapters.

Identification of notes in Operating Manuals
The notes referring to safety contained in the Operating Manual whose ignoration may result in personal injury are marked by the following symbol

safety symbol acc. to DIN 4844-W9

10013a94

The symbol

safety symbol acc. to DIN 4844-W8

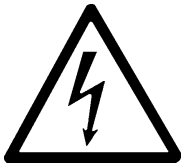

10014a94

is used for warning of electrical current.

When ignoring of safety note might result in machine damages and malfunction, the word

CAUTION

is to be added.

Notes directly fixed to the machine must be observed and kept in completely legible condition.

Staff Qualification and Training
The staff responsible for operation, maintenance, inspection and installation must be adequately qualified for these jobs. The owners must properly regulate the field of responsibility and supervision of the personnel. If the personnel is not in command of the necessary expertise, then they must be adequately trained and instructed.
If necessary, this can be done by the manufacturer/supplier on behalf of the machine owners. Furthermore, the owners must ensure that the contents of the Operating Manual are fully understood by the personnel.

Hazards resulting from ignoring the safety instructions
Failure to heed the safety warnings may result in equipment and environment damage and/or personal injury.
Ignoring the safety notes may result in the disqualification from damage claim.
As an example, in the following we list some dangers which may result from failure to observe the warnings:

- failure of machine/system to fulfill important functions
- failure to adhere to specified methods for maintenance and repair
- personal injury due to electrical, mechanical and chemical influences
- danger to environment due to leakages of harmful materials

Working safety-conscious
The safety instructions given in the Operating Manual, the prevailing national rgulations for the prevention of accidents as well as any working and shop regulations and accident prevention measures of the owners must be observed.

Safety Instructions for the Owners/Operator
- If warm or cold machine parts may involve hazards, the customer must protect them against accidental contact.
- Protection devices for moving parts must not be removed while the machine is in operation
- Leakages of harmful materials must be dumped without jeopardizing perons or environment. The requirements of the law must be satisfied.
- Danger caused by electric energy must be excluded (for details refer to the applicable specifications of VDE and the local power supply companies).

LINCOLN GmbH & Co. KG • Postfach 1263 • D-69183 Walldorf • Tel +49 (6227) 33-0 • Fax +49 (6227) 33-259

Safety Instructions for Maintenance, Inspection and Installation Services
The owners must make sure that all maintenance, inspection and installation work will be executed by authorized and qualified experts who have throroughly read the Operating Manual. Generally, any work on the machine must be done while the machine is out of operation. The procedure for the machine described in the Operating Manual must absolutely be followed. Pumps and pump units delivering harmful materials must be decontaminated.
Immediately after completion of the cleaning procedure, all safety and protection devices must be reassembled.
Material harmful to the environment must be disposed of in accordance with the applicable official regulations.
Before putting the pump/pump unit into operation, all clauses given in the chapter „Commissioning“ must be observed.

Unauthorized Modification and Spare Parts Production
Alteration and modifications of the machine are only allowed if agreed upon by the manufacturer. Original spare parts and accessory authorized by the manufacturer serve the purpose of safety. When other parts are used, the manufacturer may be released from liability for the resulting consequences.

Inadmissible Operational Modes
The operational safety of the supplied product is only granted if the product is operated according to the instructions given in chapter 1 - General - of the Operating Manual. The max. ratings listed in the Technical Data sheet must never be exceeded.
Commissioning of the product (pump/pump unit) within the European Community is forbidden until it has been decided that the machine in question meets the requirements of the EC guidelines.

LINCOLN GmbH & Co. KG • Postfach 1263 • D-69183 Walldorf • Tel +49 (6227) 33-0 • Fax +49 (6227) 33-259

2. Description

2.1 General

This Owners Manual refers to the pneumatic barrel pumps model SAF1-YL (with 1 outlet) and SAF2-YL (with 2 outlets). It is intended for the personnel charged with the installation, operation and maintenance of the pump.
If fault shoud occur although the Operating Instructions have been followed, please contact our Service Department below and indicate the detailed model designation and the order number (mentioned on the nameplate):

LINCOLN GMBH
Abt. Zentraler Kundendienst
Postfach 1263
D-69183 Walldorf
Tel.: 06227 330
Fax: 06227 33259

2.2 Appropriate Use

The barrel pumps model SAF1-YL and SAF2-YL are designed for use only in spray systems for the supply of adhesive lubricants of NLGI grades 0 and 00.
Take care that the maximum ratings mentioned in the Technical Data sheet, particularly the max. operating pressure of 300 bar, is not exceeded.
Any other use is not in accordance with the instructions and will result in the loss of claims for guarantee and liability.

Particular advantages of the SAF pumps
- direct delivery from the original drum (no refilling necessary)
- no follower plate, i.e. the delivery is also possible when the barrels are extremely damaged or dented.
- easy removing and installation on a lidded barrel by means of a stand with winch (see „Accessories“)

2.3 Technical Data

Modell:	SAF1	SAF2
Number of outlets	1	2
Pneumatic drive, ratio	40:1	40:1
Lubricant output/stroke	1.1cm³	2x1.1 cm³
Max. operating pressure	300 bar	
Driving pressure	min. 4bar, max 10bar	
Reservoir	200 l lidded barrels acc. to DIN 6644	
Suitable lubricants	adhesive lubricants NLGI grades 0 and 00	
Sound level	< 70 dB(A)	

2.4 Structure

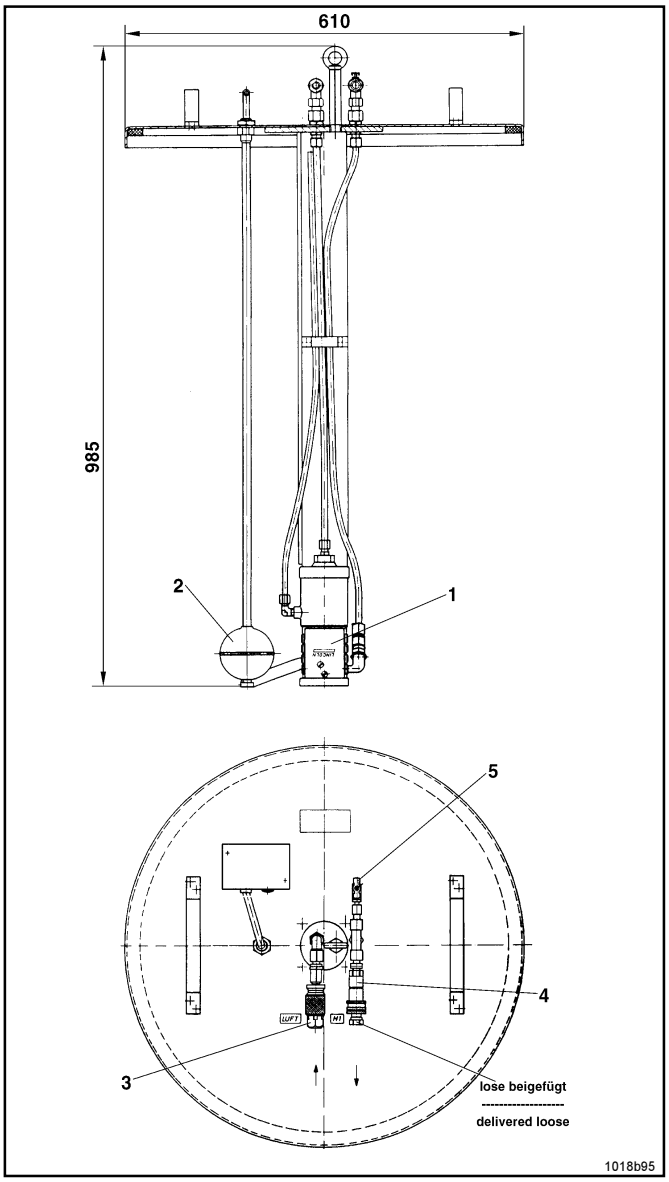

Fig. 2.4.1: Pneumatic barrel pump SAF1

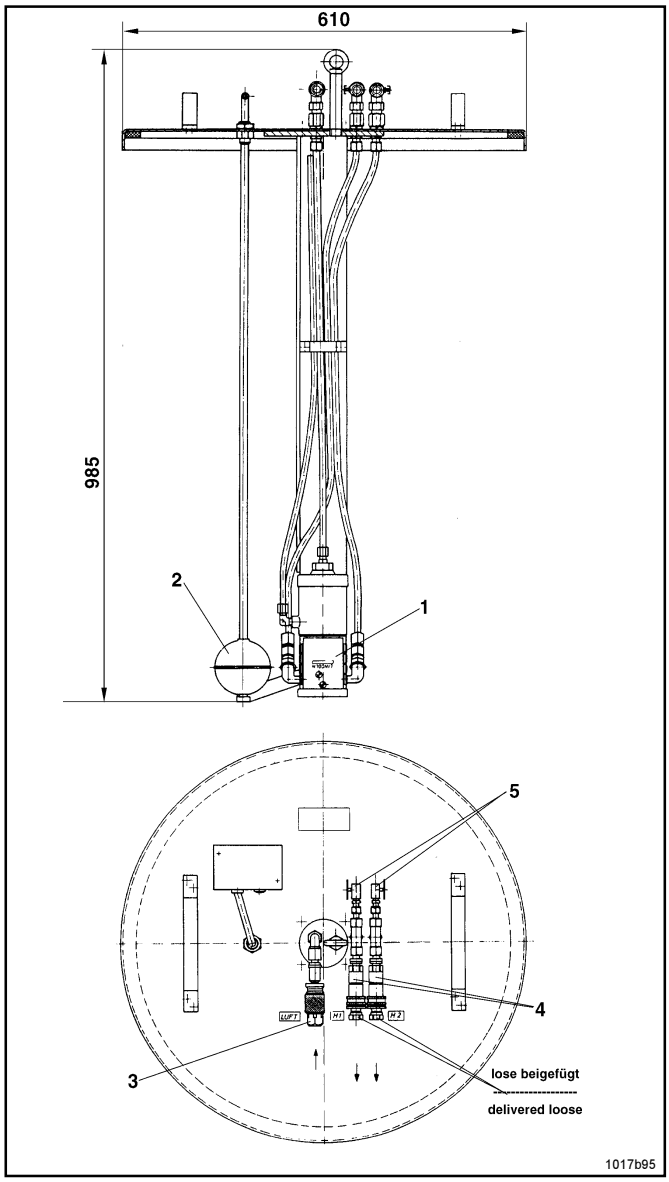

Fig. 2.4.2: Pneumatic barrel pump SAF2

The pump SAF1 (part no. 615-26393-4) mainly consists of the following components:

item	description
1	pump element with drive cylinder (SAF1: part no. 504-31626-2)
2	low level control with magnetic floating switch (part no. 415-22935-1)
3	Coupling for compressed air (part no. 815, nipple: part no. 11661)
4	coupling for lubricant (part no. 226-13728-1, nipple: part no. 251-14073-1)
5	air relief cock (part no. 68042)

The pump SAF2 (part no. 615-26395-4) mainly consists of the following components:

item	description
1	pump element with drive cylinder (SAF2: part no. 504-31629-2)
2	low level control with magnetic floating switch (part no. 415-22935-1)
3	Coupling for compressed air (part no. 815, nipple: part no. 11661)
4	coupling for lubricant (part no. 226-13728-1, nipple: part no. 251-14073-1)
5	air relief cock (part no. 68042)

LINCOLN GmbH & Co. KG • Postfach 1263 • D-69183 Walldorf • Tel +49 (6227) 33-0 • Fax +49 (6227) 33-259

2.5 Electrical Equipment

Electric low level control
Magnetic floating switch with stainless steel float
(1.4571)
Diameter 82 mm
Guiding tube and fittings of stainless steel
2 change-over switches 40 VA/250 V = /1A
Protection IP 65

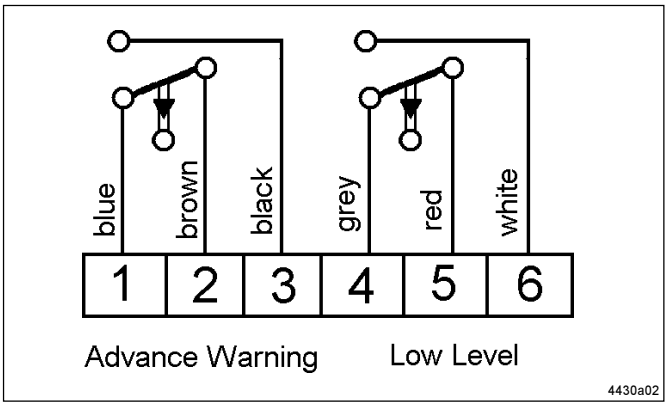

Fig. 2.5.1: Terminal diagram

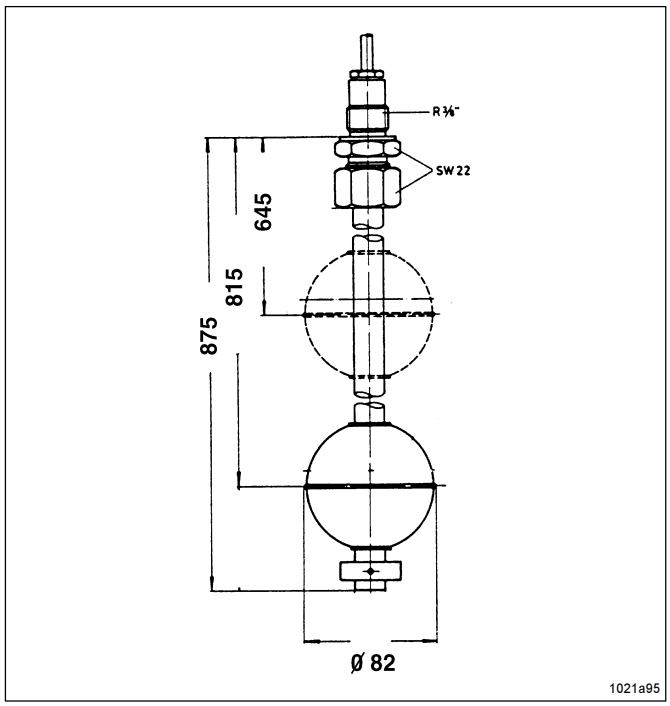

Fig. 2.5.2: Dimension drawing

Operation

- The elctromagnetic switches are equipped with hermetically sealed reed contacts. They are actuated without wear and contact-free via the magnetic field of a magnet which is lodged in the float. The only moving part of the magnetic floating switch is the float which slides upwards and downwards on the sliding tube with the level of fluid.

Note : The life of the electromagnetic switch strongly depends on the conditions under which it is loaded. Since the data relative to the maximum switching capacity refer to strictly resistive loads, which cannot be always guaranteed in practice, it is necessary to take the corresponding contact protection measures in the case of deviating loads.

Contact protection measures

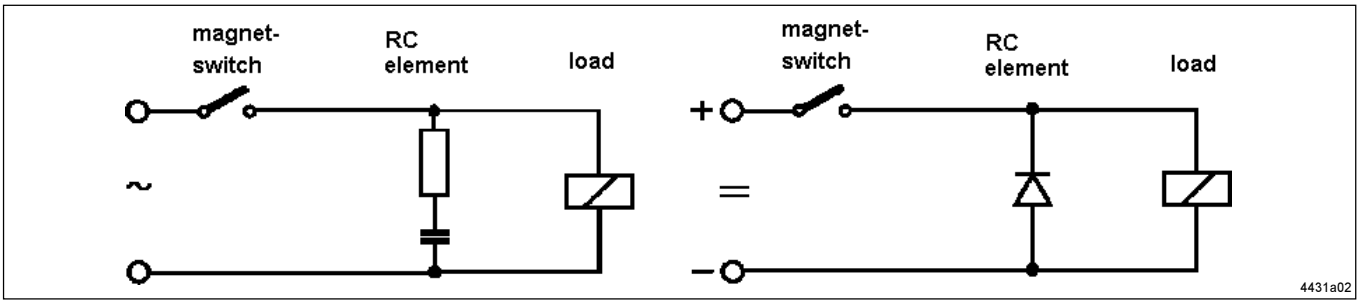

Fig. 2.5.3: Contact protection measures

LINCOLN GmbH & Co. KG • Postfach 1263 • D-69183 Walldorf • Tel +49 (6227) 33-0 • Fax +49 (6227) 33-259

2.6 Mode of Operation

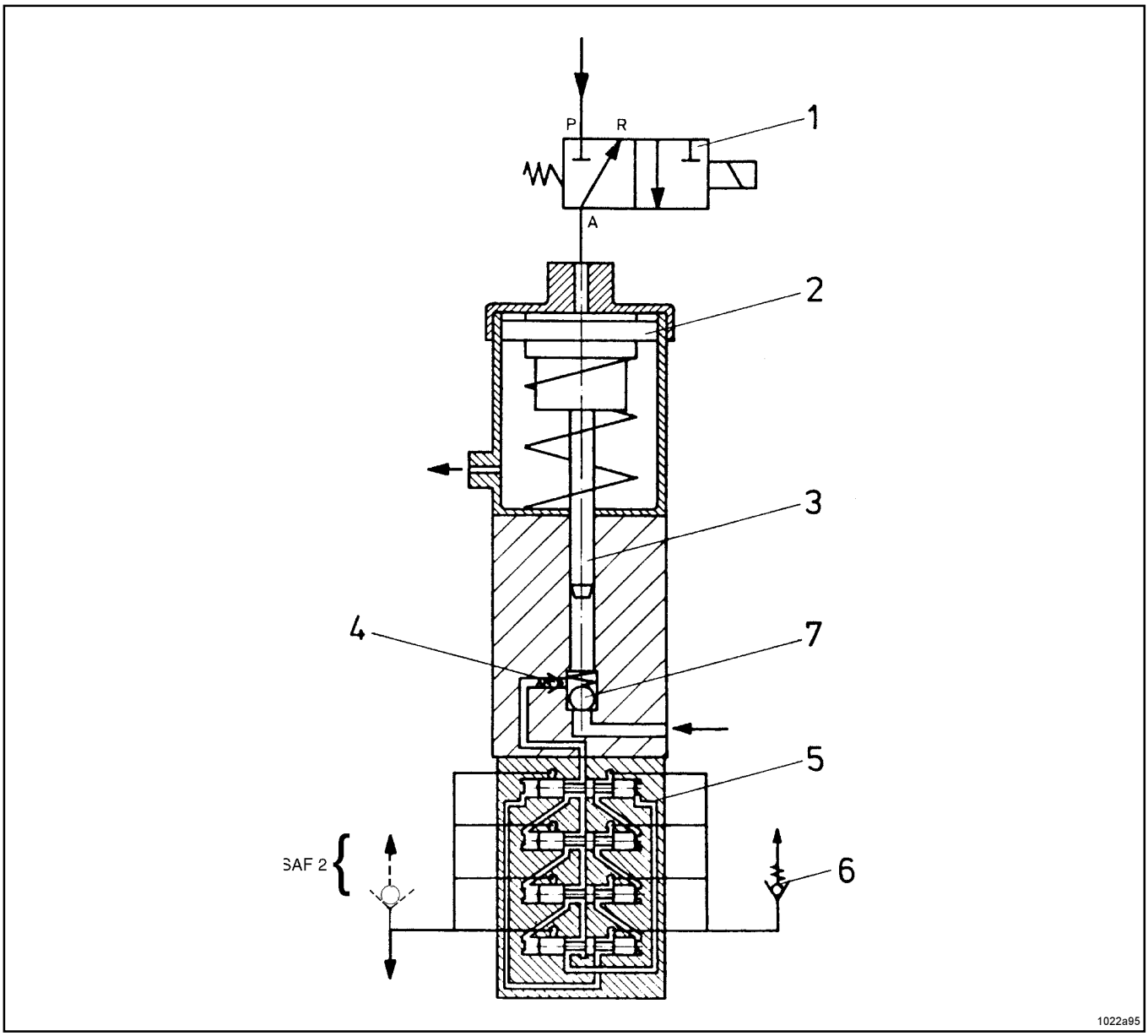

Fig. 2.6.1: Function

A 3/2-way air solenoid valve (integrated in maintenance unit HSA-TD 20) is required for the drive of the spring-loaded air piston.
When the solenoid valve is activated, compressed air enters the air cylinder (item 2) and displaces the air piston downward. The working piston (item 3)supplies the lubricant via the check valve (item 4) to the integrated metering device (item 5).
The metering devices meters the lubricant quantity in two equal quantities of each 1.1 cm³/stroke.
The pump SAF1 (for 1 pinion) supplies a part of the lubricant via the external check valve to the outlet. The pump SAF2 (for 2 pinions)supplies both lubricant quantities to the two outlets.
The 3/2-way solenoid valve must keep activated at least 3 seconds to allow the pressure built up in the system.
Once the solenoid valve has been switched off the spring-loaded air piston can be put in its initial position and, together with the working piston, it simultaneously sucks in lubricant from the barrel.
The pump is ready for the next working cycle.

LINCOLN GmbH & Co. KG • Postfach 1263 • D-69183 Walldorf • Tel +49 (6227) 33-0 • Fax +49 (6227) 33-259

3 Erection and Assembly

3.1 Erection of Pump

Requirements on the place of installation
- protected from dust and dirt
- safe against atmospheric influences (note the protection type of the electric motor)
- enough space for opening the reservoir cover and executing the maintenance works (the space required depends on the pump size)
- even, solid and vibration-free place of erection

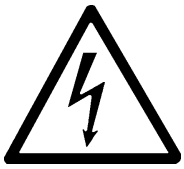

3.2 Electrical Connection

All electrical work should be undertaken only by qualified personnel.
Connect the low level control acc. to terminal diagram, item 2.5. Observe the enclosed circuit diagrams.

4 Operating Instructions

4.1 Commissioning

The pump is filled with lubricant in the factory and vented. The lubricant remains in the pump which is protected by a plastic bag on delivery and for storage. After the plastic bag has been removed, the pump can be put into a full lubricant drum and must not be vented.

CAUTION

The pump should be put into operation only after it has been placed into a full lubricant drum. When changing the drum, pay a great attention that no dust or dirt enters the drum. The drum cover must evenly lie on the drum edge.

The driving air must be free from condensate and impurities. For the air treatment, use a air maintenance unit consisting of air filter, pressure regulator and lubricator.
Adjust the pressure regulator of the air maintenance unit to 5 bar.

CAUTION

Do not adjust the air regulator over 7 bar. All system components (tubes, hoses, tube fittings, etc.) must be designed for the maximum system pressure.

Overpressure safety valve
In spray systems with controlled nozzles the lubricant line is equipped with a safety valve which is set to a pressure of 120 bar (integrated in the stand with winch)

Lubricant filter
It is recommended to use a lubricant filter to avoid failures which might be caused by impurities (in spray systems, a filter is already installed on the mounting plate).

LINCOLN GmbH & Co. KG • Postfach 1263 • D-69183 Walldorf • Tel +49 (6227) 33-0 • Fax +49 (6227) 33-259

4.2 Maintenance and Repairs

Before executing any repair on the pump, switch pump off and protect it from inadvertent restart. Open theair relief cock in order to decrease the pressure in the system. Repairs should be executed only by qualified personnel using original spare parts.

Since the pump is lubricated by the lubricant which is delivered, it does not need any particular maintenance.

Regular maintenance works:
- Clean the lubricant filter (on the mounting plate) every 100 operating hours or replace it.
- Check the oil level in the lubricator of the air maintenance unit. Refill oil, if necessary.
- Check and clean the air filter of the air maintenance unit

LINCOLN GmbH & Co. KG • Postfach 1263 • D-69183 Walldorf • Tel +49 (6227) 33-0 • Fax +49 (6227) 33-259

4.3 Troubleshooting

Note: The following only describes pump failures. Failures due to electrical malfunctioning or system malfunction are indicated in the System Description

Fault: pump does not supply the lubricant

• **Cause:**	• **Remedy**
• Lubricant barrel empty	• Change barrel
• Pump has sucked in air	• Vent pump as follows: Disconnect lubricant coupling item 4. Open air relief cock item 5. Switch pump on and, after a quantity of about 2-3 cm³ has emerged,reconnect coupling and close air cock.
• 3/2-way valve does not open/close	• Clean solenoid valve. Replace it, if necessary. Check current supply.

Fault: no pressure buil-up in system

• **Cause:**	• **Remedy**
• Feed line network leaky	• Check lines for loosen tube fittings, line break or torn off hoses. Retighten fittings, replace defective tubing. Replace hoses or reconnect them.
• Suction valve clogged or defective (item 9, spare parts list)	• Remove pump from barrel. Remove holding plate after having disconnected the 2 hexagon socket head screws. Remove suction valve item 9. Clean it and replace it, if necessary. Reassemble in opposite order. NOTE: After the suction valve has been cleaned or replaced and the pump reassembled, vent the pump as above described.
• Inner check valve (item 21) clogged	• Unscrew screw of pressure valve. Clean valve ball, spring and valve seat. Replace them, if ecessary.
• Outer check valve (item 18) clogged or defective	• Unscrew compression nut. Disconnect tube line. Remove check valve, clean it and replace it, if necessary.
• No compressed air or pressure too low	• Check pressure gauge on air maintenance unit. If necessary, increase pressure at compressor and check air lines.

LINCOLN GmbH & Co. KG • Postfach 1263 • D-69183 Walldorf • Tel +49 (6227) 33-0 • Fax +49 (6227) 33-259

- Fault: lubricant is leaking from the safety valve

• **Cause:**	• **Remedy**
• Lubricant filter clogged	• Clean filter. Replace strainers, if necessary
• Blockage in the feed line system, metering devices or nozzles blocked	• Eliminate cause of blockage. Disassemble metering devices and nozzles and clean them

All repair works which are beyond the knowledge of the owners's personnel must be executed by Lincoln qualified experts. For this, send the defective pump to the Repair Department of Lincoln or call a specialist who will repair the pump on site.

Address of the Service Department:

LINCOLN GmbH
Abt. Zentraler Kundendienst
Postfach 1263
D-69183 Walldorf
Tel. 06227 330
Fax. 06227 33259

4.4 Settings

Setting of the lubrication quantity with the Lincoln control unit in the switch cabinet

Please consider the indications of the lubricant manufacturer and the condition of the drive (running-in operation, permanent operation) when setting the lubricant quantity.
Possible time settings in the switch cabinet:
Pause time: 0 sec to 99 sec
Operating time: 8 sec to 99 sec

Minimum settings (pause time 0 sec/ operating time 8 sec) result in a maximum lubrication frequency of 7.5 lube cycles per minute; i.e. 495 cm³/h for the SAF1 one-pinion drive, respectively 990 cm³/h for the SAF2 double-pinion drive.

There are 2 possibilities to set the lubricant quantity:

1. **Single lube cycle which is followed by an adjustable pause time (conventional control)**

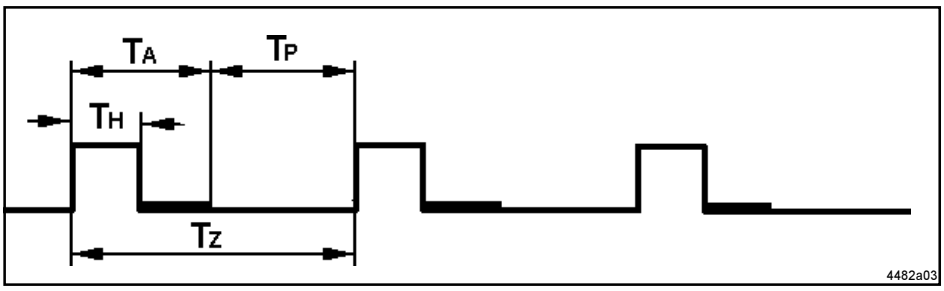

T_A = Operating time
T_P = Pause time
T_H = Holding time for 3/2 way solenoid valve (firmly set to 4 seconds)
T_Z = Time for 1 lube cycle

Operating time 8 sec (= minimum setting)
Pause time 4 sec
Result: 1 lube cycle every 12 seconds = 5 cycles per minute.

2. Within the operating time several lube cycles are carried out. Then follows a longer pause time (recommended for high-viscous lubricants or low temperatures)

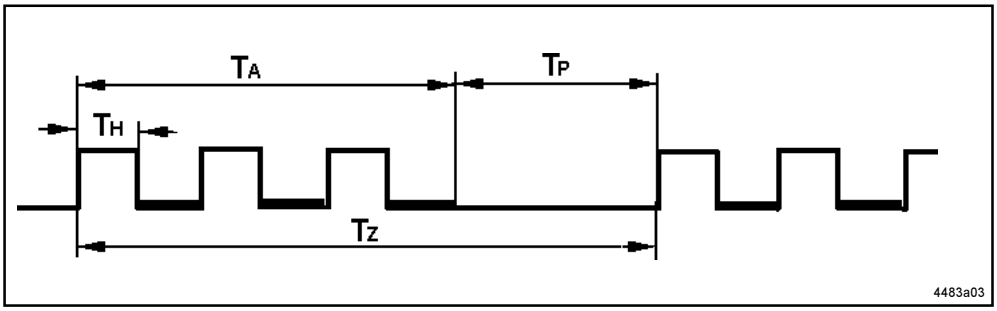

For example, the operating time is 24 seconds.
(= 3 lube cycles within the operating time)
Then follows a pause time of 21 seconds.
The result is 4 cycles per minute in the average.

T_A = Operating time
T_P = Pause time
T_H = Holding time for 3/2 way solenoid valve (firmly set to 4 seconds)
T_Z = Time for 1 lube cycle

Examples of calculation:

Q_{ges} = desired lubricant quantity per hour
Z_1 = number of lube cycles within the operating time (for setting according to possibility 2)
$Z_{min/h}$ = total number of lube cycles per minute or hour
m_{Pu} = output of the SAF pump per stroke constantly (1.1 cm³ for SAF1; 2 x 1.1 cm³ for SAF2)

Desired lubricant quantity 160 cm³/h = Q_{ges}

Calculation of the number of lube cycles:

$Z_h = Q_{ges} : m_{Pu}$ = 160 cm³/h : 1.1 cm³ = 144/h
$Z_{min} = Z_h : 60$ = 2.4/min

Setting according to possibility 1:

Operating time: 8 sec
Pause time $T_P = (60 : Z_{min}) - T_A$ = (60 : 2.4) – 8 sec
= 25 sec – 8 sec = 17 sec

This means, a lube pulse is carried out every 25 seconds.

Setting according to possibility 2:

Setting of the operating time:
- choose number of lube cycles = Z_1

Z_1 should be enough to supply all connected wide-angle spray nozzles with lubricant at least once.

(For this example Z_1 = 3)

$T_A = 8 \text{ s} \times Z_1$ = 8 sec x 3 = 24 sec (= operating time)

Setting of the pause time:

$T_p = (60 \times Z_1) : Z_{min} - T_A$
= (60 x 3) : 2.4 – 24 = 51 sec (= pause time)

This means, the 3 lube cycles set repeat every 75 seconds.

LINCOLN GmbH & Co. KG • Postfach 1263 • D-69183 Walldorf • Tel +49 (6227) 33-0 • Fax +49 (6227) 33-259

5 Spare Parts List

Pump Element with Drive Cylinder SAF 1
part-no. 504-31626-2

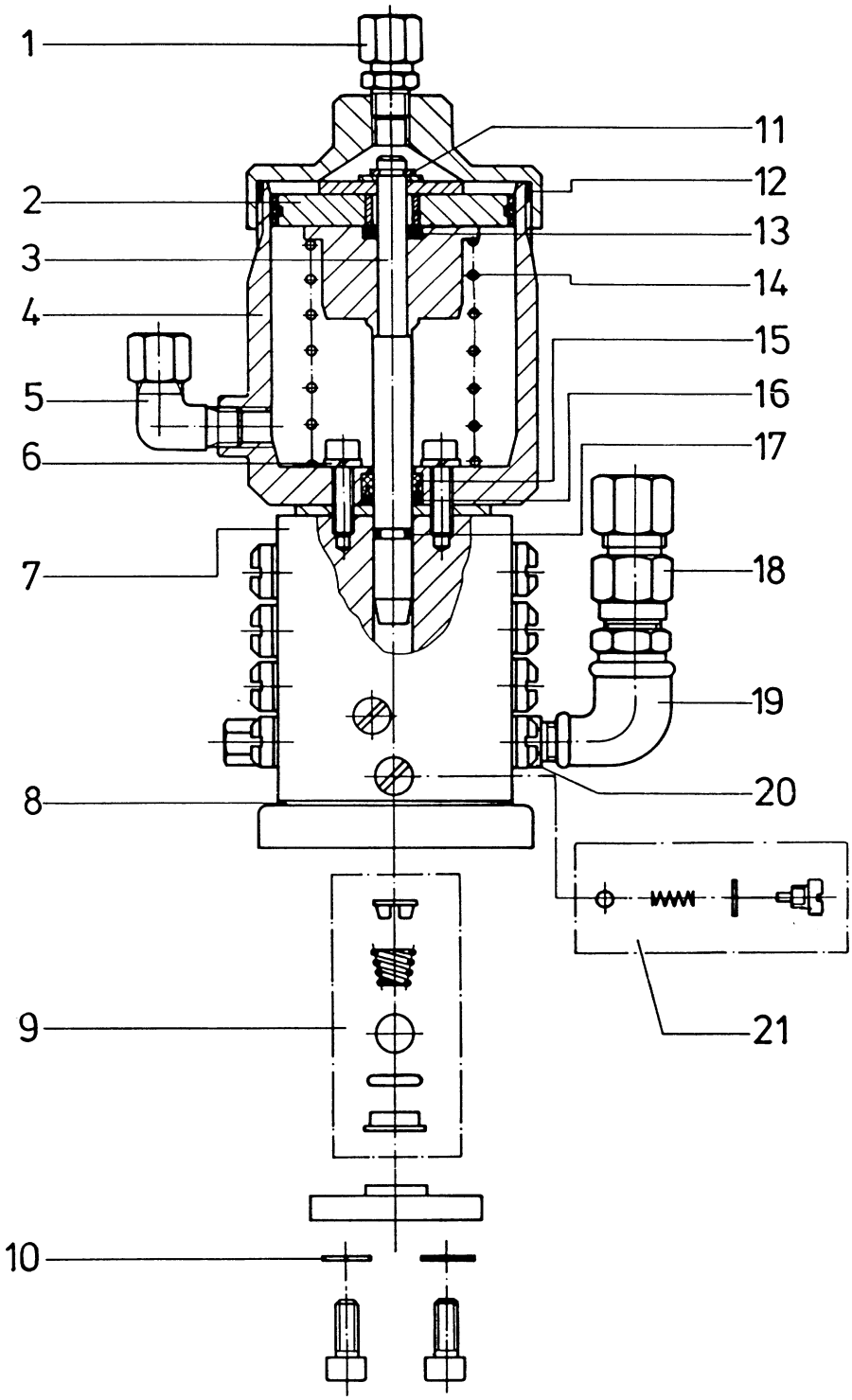

1023a95

Subject to change without notice

LINCOLN GmbH & Co. KG • Postfach 1263 • D-69183 Walldorf • Tel +49 (6227) 33-0 • Fax +49 (6227) 33-259

Pump Element with Drive Cylinder SAF 1
part-no. 504-31626-2

Item	Designation	Qty.	Part Number
1	male connector GE 8 - LLR 1/8	1	223-12270-9
2	air piston with sleeve	1	504-30342-1
3	piston	1	310-19156-1
4	cylinder	1	314-19123-1
5	male elbow connector WE 8 - LLR 1/8	1	223-13021-6
6	spring lock washer A 5	2	213-12505-1
7	pump body assembly	1	504-31858-1
8	gasket, Abil	1	306-19550-1
9	suction valve, assembly	1	504-36076-4
10	washer A 6,4	4	209-13011-5
11	retaining ring A 8x0,8	1	211-12472-2
12	O-ring 65 x 3	1	219-12225-6
13	O-ring 8 x 4	1	219-12227-9
14	compression spring	1	218-13623-4
15	u-cup sealing ring10x16x6x4	1	220-12236-7
16	O-ring 11x2	1	219-12223-4
17	O-ring 6x2	1	219-12451-5
18	check valve RHV 8 S R 1/4 V	1	223-12291-2
19	elbow 90° 1/4 x 1/8	1	222-12434-3
20	equal nipple R 1/8	1	222-12418-5
21	check valve assembly	1	504-30260-1
	kit of seals (items 6,8,10,11,12,13,15,16,17)	1	515-31662-1

LINCOLN GmbH & Co. KG • Postfach 1263 • D-69183 Walldorf • Tel +49 (6227) 33-0 • Fax +49 (6227) 33-259

Pump Element with Drive Cylinder SAF 2
Part-no. 504-31629-2

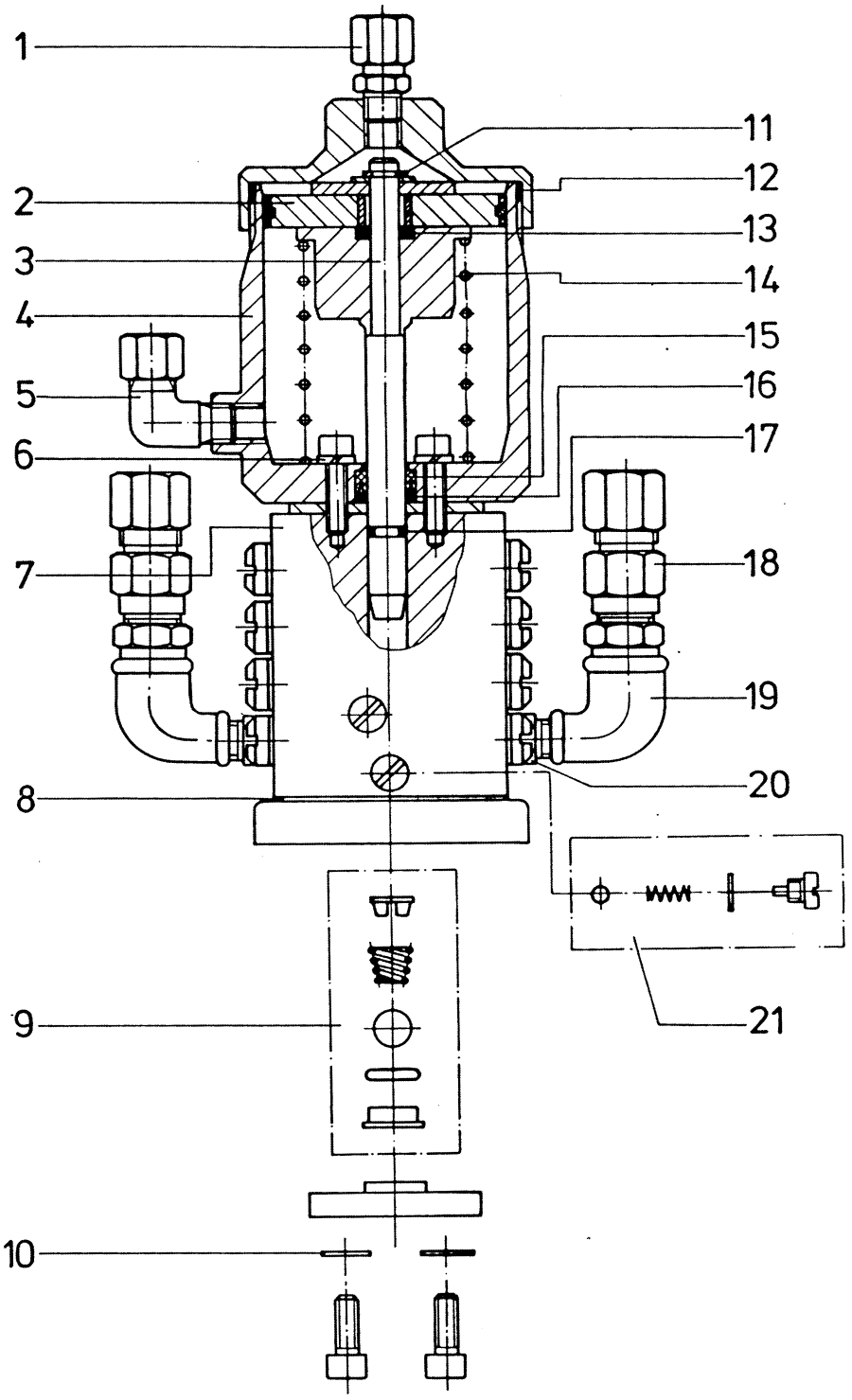

Subject to change without notice

LINCOLN GmbH & Co. KG • Postfach 1263 • D-69183 Walldorf • Tel +49 (6227) 33-0 • Fax +49 (6227) 33-259

Pump Element with Drive Cylinder SAF 2
Part-no. 504-31629-2

Item	Designation	Qty.	Part Number
1	male connector GE 8 - LLR 1/8	1	223-12270-9
2	air piston with sleeve	1	504-30342-1
3	piston	1	310-19156-1
4	cylinder	1	314-19123-1
5	male elbow connector WE 8 - LLR 1/8	1	223-13021-6
6	spring lock washer A 5	2	213-12505-1
7	pump body assembly	1	504-31858-1
8	gasket, Abil	1	306-19550-1
9	suction valve, assembly	1	504-36076-4
10	washer A 6,4	4	209-13011-5
11	retaining ring A 8x0,8	1	211-12472-2
12	o-ring 65 x 3	1	219-12225-6
13	o-ring 8 x 4	1	219-12227-9
14	compression spring	1	218-13623-4
15	u-cup sealing ring10x16x6x4	1	220-12236-7
16	o-ring 11x2	1	219-12223-4
17	o-ring 6x2	1	219-12451-5
18	check valve RHV 8 SR 1/4 V	2	223-12291-2
19	elbow 90° 1/4 x 1/8	2	222-12434-3
20	equal nipple R 1/8	2	222-12418-5
21	check valve assembly	1	504-30260-1
	kit of seals (items 6,8,10,11,12,13,15,16,17)	1	515-31662-1

LINCOLN GmbH & Co. KG • Postfach 1263 • D-69183 Walldorf • Tel +49 (6227) 33-0 • Fax +49 (6227) 33-259

6 Accessories

6.1 Stand with winch

maintenance unit and overpressure safety device for SAF1
(1-pinion drive) part no. 615-29097-1 (220V, 50/60 Hz)

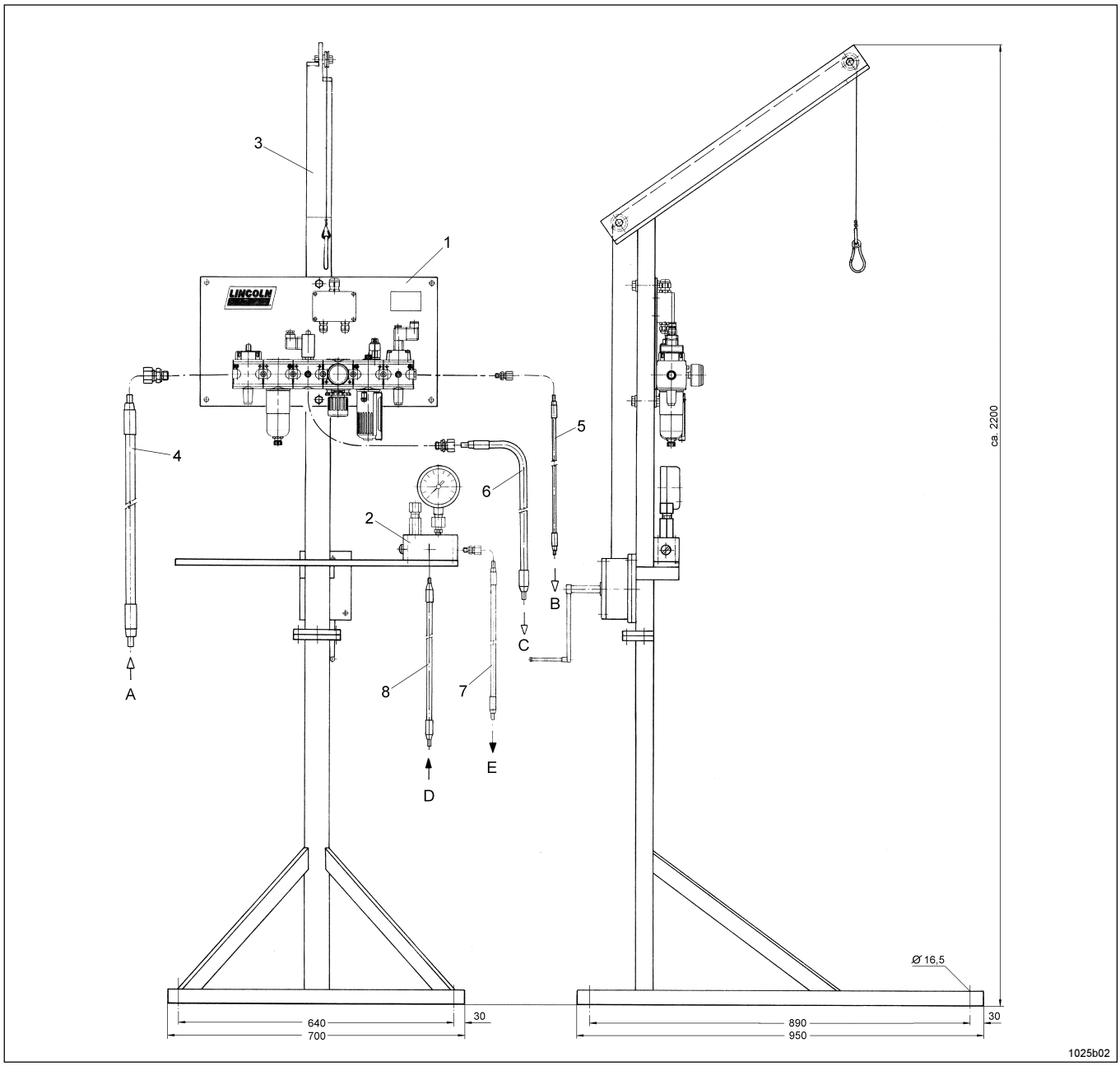

Item	Designation	Part no.
1	maintenance unit 220V 50/60Hz	615-29093-1
2	overpressure safety device HSA-TD 21	515-30955-1
3	stand with winch	
4	low pressure hose OD 16 x 1040	225-13039-3
5	high pressure hose OD 6 x 1540	225-13039-1
6	low pressure hose OD 13 x 1040	225-13039-2
7	high pressure hose OD 8 x 1040	225-12324-8
8	high pressure hose OD 8 x 1540	225-12325-1

Item	Designation
A	compressed air from compressor
B	compressed air to pump
C	compressed air to spray unit
D	lubricant from pump
E	lubricant to spray unit

LINCOLN GmbH & Co. KG • Postfach 1263 • D-69183 Walldorf • Tel +49 (6227) 33-0 • Fax +49 (6227) 33-259

6.2 Stand with winch

maintenance unit and overpressure safety device for SAF2
(2-pinion drive) part no. 615-29102-1 (220V, 50/60 Hz)

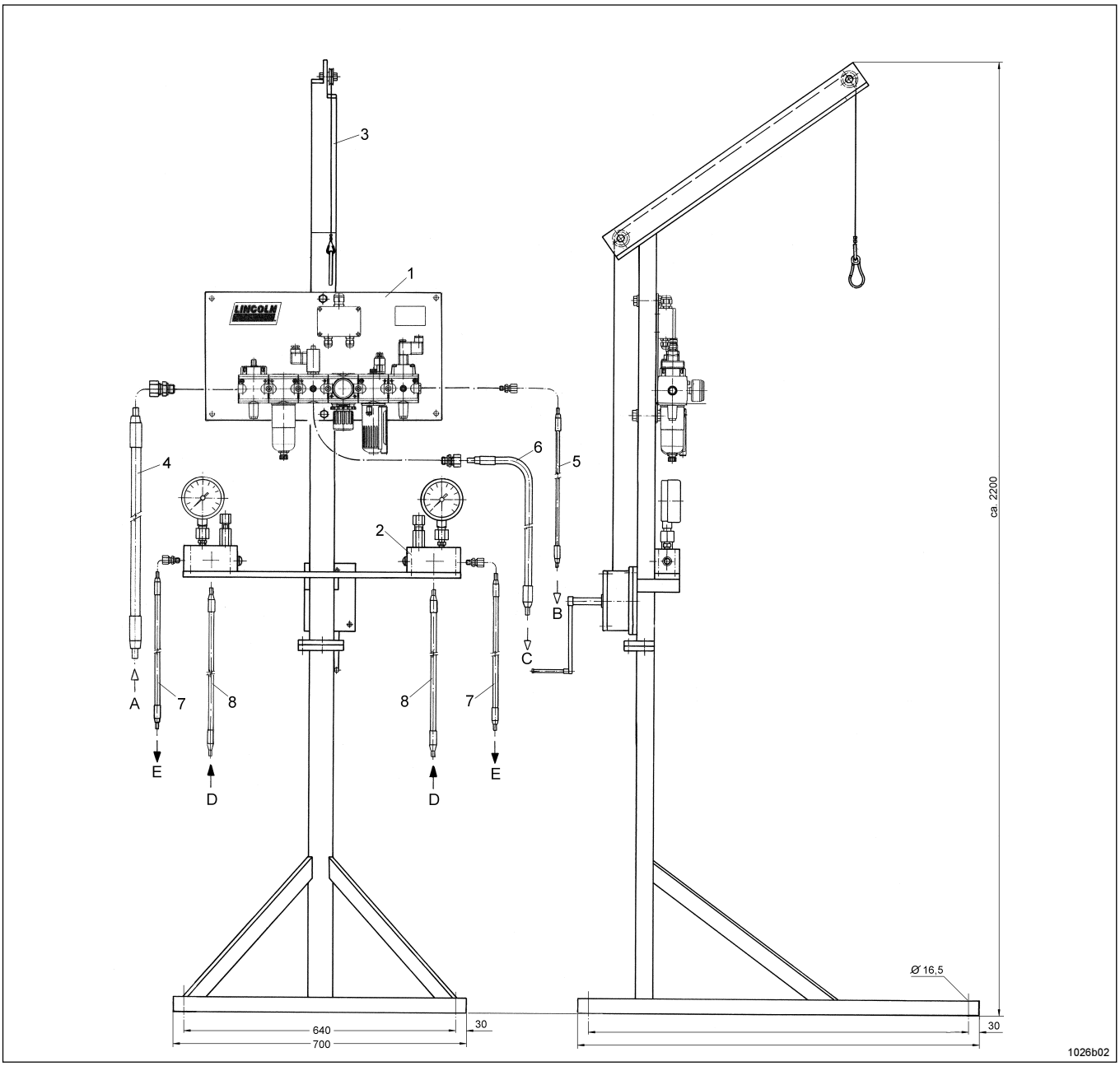

Item	Designation	Part no.
1	maintenance unit 220V 50/60 Hz	615-29093-1
2	overpressure safety device HSA-TD 21	515-30955-1
3	stand with winch	
4	low pressure hose OD 16 x 1040	225-13039-3
5	high pressure hose OD 6 x 1540	225-13039-1
6	low pressure hose OD 13 x 1040	225-13039-2
7	high pressure hose OD 8 x 1040	225-12324-8
8	high pressure hose OD 8 x 1540	225-12325-1

Item	Designation
A	compressed air from compressor
B	compressed air to pump
C	compressed air to spray unit
D	lubricant from pump
E	lubricant to spray unit

LINCOLN GmbH & Co. KG • Postfach 1263 • D-69183 Walldorf • Tel +49 (6227) 33-0 • Fax +49 (6227) 33-259

Declaration by the manufacturer as defined by machinery directive 98/37/EEC Annex II B

We hereby declare that the supplied model

Pump Type SAF ...

is intended to be incorporated into machinery covered by this directive and must not be put into service until the machinery into which it is to be incorporated has been declared in conformity with the provisions of the above mentioned directive – including all modifications of this directive valid at the time of the declaration.

Applied harmonized standards, in particular:

EN 292-1	Safety of machinery, part 1 Basic terminology, methodology
EN 292-2	Safety of machinery, part 2 Technical guiding principles and specifications
EN 809	Pumps and pump units for liquids, safety requirements
EN 60204-1	Safety of machinery Electric equipment of machines Part 1: General requirements

Walldorf, June, 2002 , Dr. Ing. Z. Paluncic

Subject to change without notice

LINCOLN GmbH & Co. KG • Postfach 1263 • D-69183 Walldorf • Tel +49 (6227) 33-0 • Fax +49 (6227) 33-259