Hydraulic Hammer Pump
Model 85426
Series “A”

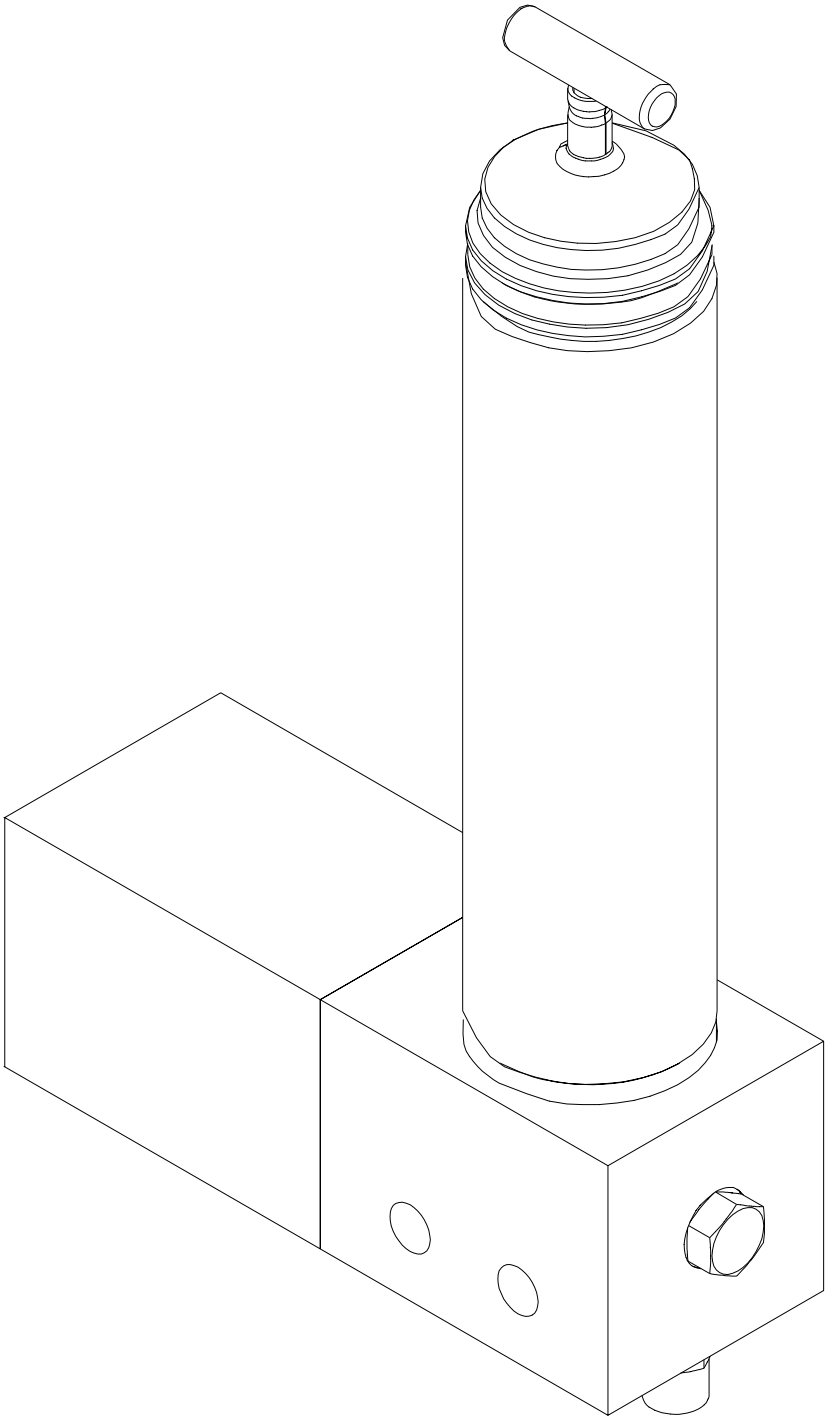

Table of Contents

Safety

Read and carefully observe these operating instructions before unpacking and operating the pump. The pump must be operated, maintained and repaired exclusively by persons familiar with the operating instructions. Local safety regulations regarding installation, operation and maintenance must be followed.

Operate this pump only after safety instructions and this service manual are fully understood.

⚠ WARNING

Indicates a potentially hazardous situation which, if not avoided, could result in death or serious injury.

⚠ CAUTION

Indicates a potentially hazardous situation which, if not avoided, may result in minor or moderate injury.

Safety Instructions

This equipment generates very high grease pressure. Extreme caution should be used when operating this equipment as material leaks from loose or ruptured components can inject fluid through the skin and into the body causing serious bodily injury. Adequate protection is recommended to prevent splashing of material onto the skin or into the eyes.

⚠ WARNING

If any fluid appears to penetrate the skin, get emergency medical immediately. Do not treat as a simple cut. Tell attending physician exactly what fluid was injected.

Description

General Description

This unit is a hydraulically operated, single acting, spring return, positive displacement pump designed to deliver grease under pressure. The pump is primarily designed to lubricate bushings of the tool bit in Hydraulic Hammers. The pump can be used to lubricate bushings and bearings on grippers and crushers. The pump is designed to be directly installed on the hammer, gripper or crusher and connected to the hydraulic power supply of the carrier. Grease outlet of the pump should be connected by hose to the point of lubrication.

The pump could be attached to an SSV divider block for multiple bearing lubrication.

The pump uses grease from standard 14.5 oz. grease cartridges, eliminating the need for bulk filling equipment. The pump may be filled from a bulk lubricant container if desired.

Appropriate Use

- This pump is exclusively designed to dispense grease in Hydraulic Hammer and gripper/crusher applications.
- It should be operated only with hydraulic power.
- The maximum ratings given should not be exceeded.
- Any other use not in accordance with the instructions will result in loss of claims for warranty and liability.

Product Specification

Pump Ratio	1.3:1
Output per Stroke,	0.018 in³ (0.3 cm³)*
Hydraulic Inlet Pressure (max.)	5,000 psig (345 bar)
Grease Reservoir Vol.	14.5 oz
Max Inlet Back Pressure	200 PSIG (13.8 bar)
Output Pressure (max.)	6500 PSIG (450 bar)
Operating Temperature	-10°F to +180°F (-23°C to +80°C)
Hydraulic Port	SAE #4 (7/16-20 UNF)
Pump Outlet	SAE #4 (7/16-20 UNF)
Weight (empty)	16.3 lbs. (7.4 kg)
Weight (full)	17.3 lbs. (7.8kg)

* **NOTE**: Pump output can be increased up to 0.072 in³ (1.2 cm³) by replacing the metering plug (23).

Pump Operation

The pump operates simultaneously with the hammer. Usually the carrier (excavator, back hoe or skid steer) has a foot pedal to operate the hammer. Each time the operator of the carrier starts the hammer pushing the pedal, the pump will make one stroke to dispense grease to the point of lubrication. When operator stops the hammer, to reposition or to start new work, the hydraulic pressure to the pump must be vented and the springs (8, 9, and 10) will return the pump plunger (6) into the initial position for the next lubrication cycle. For proper pump operation, the inlet hydraulic back pressure in the connecting hose has to be below 200 psig (14 bar). As plunger opens the grease inlet port, grease flows into the cavity due to vacuum in the cavity and the pressure exerted on the grease by the cartridge follower spring (see Illustration 1).

Changing Pump Output

Pump is shipped with the metering plug (23) part number 270801, for minimum grease output - 0.018 in³ (0.3 cm³). The output of the pump can be increased by changing the metering plug (23):

-P/N 270802	-0.036 in³ (0.6 cm³)
-P/N 270803	-0.048 in³ (0.8 cm³)
-P/N 270804	-0.060 in³ (1.0 cm³)
-P/N 270805	-0.072 in³ (1.2 cm³)

Installing the Pump

The pump should be installed directly on the hammer or gripper/crusher. Preferable mounting of the pump is cartridge housing (28) in the upright position, but it may be mounted in a horizontal position as well. Make sure to allow sufficient space for cartridge removal to refill and pump servicing. Mount in area where the pump indicator cap (18) will be visible to monitor cartridge lubricant level.

1. Use two 1/2 in. (12 mm.) bolts to securely mount the pump on an even and solid surface of the hammer. If necessary, fabricate a mounting bracket.
2. Connect hydraulic power supply to the pump inlet (see Illustration 2). Use appropriate high pressure hose.
3. Fill the pump with grease. (See Filling Pump with Grease and Air Purging instructions.)
4. Attach the lubricant supply hose to the pump outlet.
5. Prime the supply hose with grease.
6. Connect lubricant supply hose to the lubrication point.

IMPORTANT: Low Level indicator rod (14) will extend from bottom of pump when grease cartridge becomes empty. See illustration 2. Replace empty cartridge promptly with a new grease gartridge.

Filling Pump with Grease
Removing Empty Cartridge

1. Pull back on follower handle until the follower rod is fully extended and latch the follower rod groove into the slot on the tube cap.
2. Unscrew Grease Cartridge Housing (28) from Pump Head (11).
3. Carefully release follower handle to eject empty cartridge from container tube.

Installing Grease Cartridge

1. Visually check follower seal lip direction before loading a new cartridge. The follower seal lip must be directed toward the follower handle for cartridge loading. See Illustration 1. To change direction of the follower seal, unscrew tube cap from container tube and pull on handle to remove follower seal from tube. Flip follower seal over and re-assemble.
2. Pull back on follower handle and latch the follower rod groove into the slot on the tube cap.
3. Remove the plastic cap from the grease cartridge and insert cartridge into container tube.
4. Remove the pull tab from grease cartridge and screw Grease Cartridge Housing (28) into Pump Head (11).
5. Release follower rod from slot. Purge air from pump. See air purging instructions.

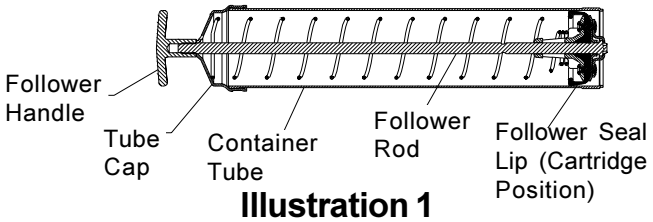

Illustration 1

Manual (Bulk) Filling

1. Unscrew Grease Cartridge Housing (28) from Pump Head (11).
2. The follower seal lip must be directed toward the pump head when cartridges are not used. To change direction of follower, unscrew tube cap from container tube and pull on handle to remove follower from tube. Flip follower seal over and re-assemble.
3. Pack container tube follower end with grease to eliminate air pocket.
4. Dip packed end of the container tube about one inch into bulk container.
5. Slowly pull follower handle back while gradually pushing container tube deeper into grease.
6. When follower rod is fully extended pull sideways to latch it into slot in tube cap.
7. Wipe excess grease from outside of container tube.
8. Screw Grease Cartridge Housing (28) into Pump Head (11).
9. Release follower rod from slot. Purge air from pump. See air purging instructions.

Air Purging

1. Engage the follower rod with the follower by lightly pulling up and rotating the follower handle.
2. Push down on follower handle while pressing button on Vent Valve (12) to force any air pockets out of Pump Head (11).
3. Wipe excess grease from Vent Valve (12).

Pump Filling

[Included Lube Fitting no. 5000 must be installed in place of Vent Valve (12) for pump filling]

1. The follower seal lip must be directed toward the pump head when cartridges are not used.
2. Engage the follower rod with the follower by lightly pulling up and rotating the follower handle.
3. Push filler pump socket onto filler nipple.
4. Operate filler pump to fill container tube while watching follower rod. The container is full when notch on follower rod becomes visible.
5. Disengage follower rod from follower and push follower rod into container tube. Air purging is not required unless the Grease Cartridge Housing (28) was removed from the Pump Head (11).

Maintenance and Repair

Relieve pressure from the pump and supply lines before servicing or repairing the pump, to reduce the risk of an injury from injection, splashing fluid or moving parts.

⚠ CAUTION

Always use Lincoln Industrial parts for service and repair.

Disassembly Procedure (See Illustration #4)

Tools Required:

- 11/16” wrench
- 3/4” wrench
- 5/16” hex wrench

1. Remove tension on follower spring in Grease Cartridge Housing (28) by pulling up on follower handle and latching notch on follower rod into slot on tube cap.
2. Remove Grease Cartridge Housing (28).
3. Remove grease cartridge.
4. Remove Packing (27) from Pump Head (11).
5. Remove four Socket Head Screws (1).
6. Remove Cylinder Block (2), U-cup (3) and Piston (4).
7. Remove Piston (4) and U-cup (3) from Cylinder Block (2).
8. Remove Plunger (6), O-ring (7), Spring Retainer (5), Spring (8), Spring (9) and Spring (10) from Pump Head (11).
9. Remove O-ring (7), Spring Retainer (5), Spring (8), Spring (9), and Spring (10) from Plunger (6).
10. Remove Check Plug (19) and O-ring (20).
11. Remove Check Spring (21) and Check Ball (22) from Pump Head (11).
12. Remove Vent Valve (12) from Pump Head (11).
13. Remove Bushing (17), Indicator Cap (18), Spring (16), Washer (15), Indicator Rod (14) and Retaining Ring (13) from Pump Head (11).
14. Remove Indicator Cap (18) from Indicator Rod (14).
15. Remove Indicator Rod (14) and Retaining Ring (13) from Bushing (17).
16. Remove Spring (16) from Bushing.
17. Remove Retaining Ring (13) from Indicator Rod (14).
18. Remove Bushing (26) from Pump Head (11).
19. Remove O-Ring (25) from Pump Head (11).
20. When the Pump is disassembled, it is recommended to replace all seals which are included in the 249970 Seal Kit.
21. Reverse disassembly instructions to re-assemble pump.

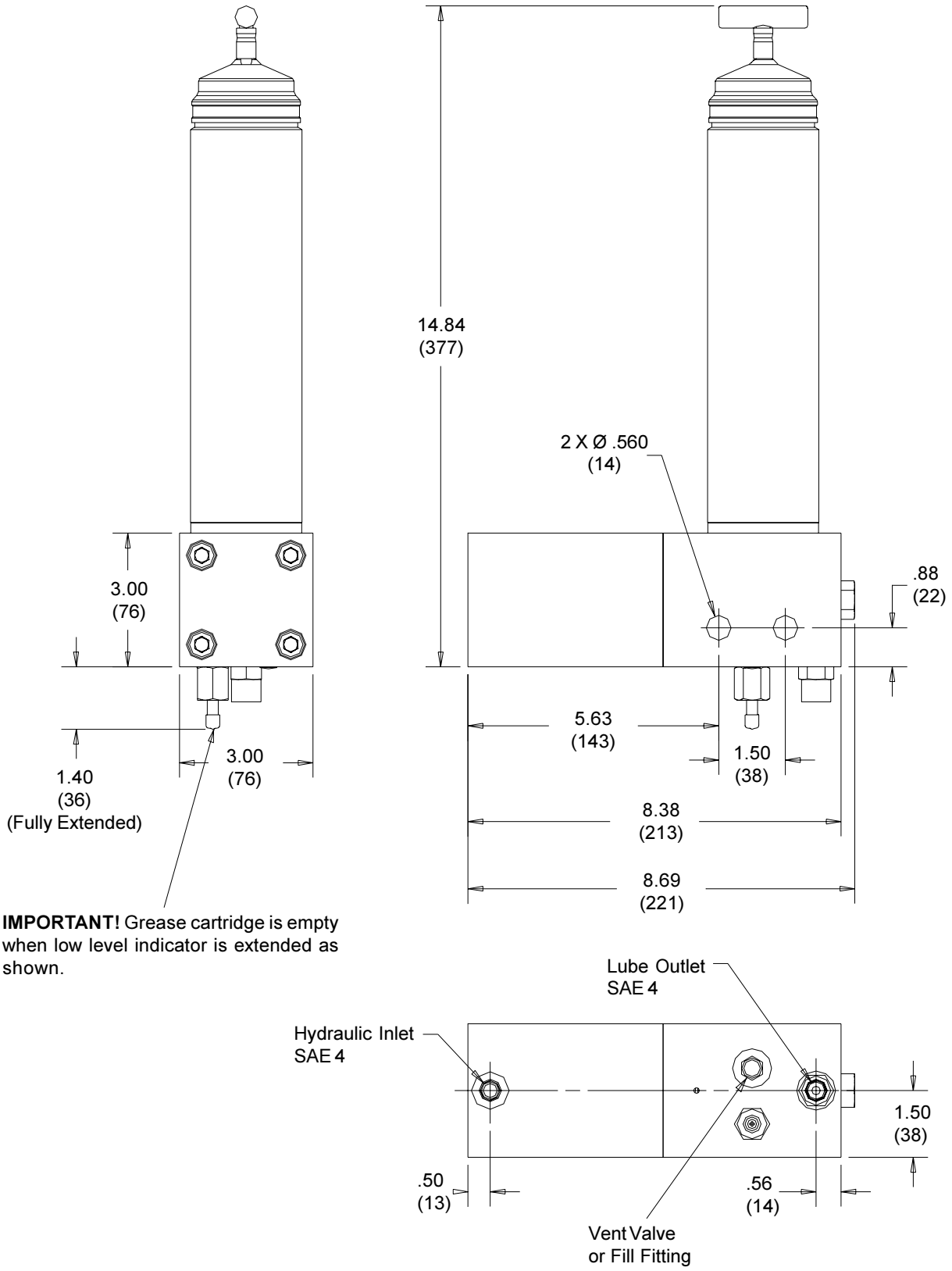

Illustration 2

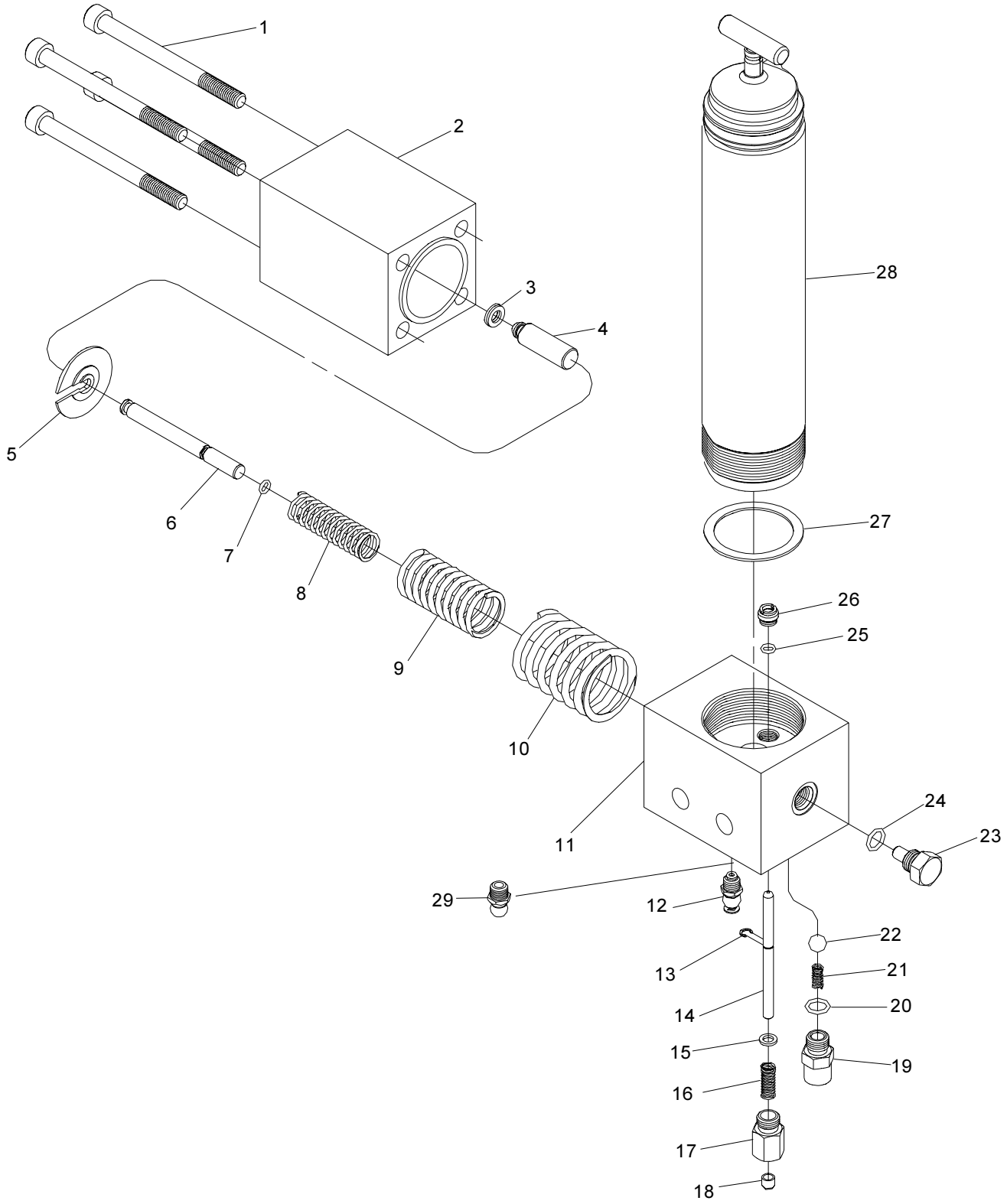
1
2
3
4
5
6
7
8
9
10
11
12
13
14
15
16
17
18
19
20
21
22
23
24
25
26
27
28
29

Repair Parts List

Item No.	Quan.	Description	Repair Part No.
1	4	Socket Head Screw (3/8-16x4-1/2)	249963
2	1	Cylinder Block	249972
3	1	U-cup (polyurethane)	(See Note #1)
4	1	Piston	249973
5	1	Spring Retainer	249962
6	1	Plunger	249974
7	1	O-ring (nitrile)	(See Note #1)
8	1	Spring	249966
9	1	Spring	249965
10	1	Spring	249964
11	1	Pump Head	249975
12	1	Vent Valve	243307
13	1	Retaining Ring	68405
14	1	Indicator Rod	249976
15	1	Washer	48358
16	1	Spring	249967
17	1	Bushing	249955
18	1	Indicator Cap	249969
19	1	Outlet Housing	249957
20	1	O-ring (nitrile)	(See Note #1)
21	1	Spring	55005
22	1	Check Ball	66030
23	1	Metering Plug (0.3cc)	270801
24	1	O-ring (nitrile)	(See Note #1)
25	1	O-ring (nitrile)	(See Note #1)
26	1	Bushing	249956
27	1	Packing (neoprene)	249968
28	1	Grease Cartridge Housing	249952
29	1	Fill Fitting	5000
	1	Seal Kit	249970

Notes:

1. Included in 249970 Seal Kit

Troubleshooting

Condition	Possible Cause	Corrective Action
Pump does not operate.	No hydraulic pressure to pump.	Turn on or connect hydraulic supply.
	Piston or plunger is stuck.	Disassemble pump, inspect for damaged or worn parts. Replace if necessary.
Pump does not dispense grease.	Grease cartridge empty.	Replace empty grease cartridge.
	Follower is stuck.	Check cartridge housing for damage.

Declaration of Conformity as defined by Machinery Directive 98/37/EG Annex II A

This is to declare that the design of the Hydraulically Operated (Model 85426) Hammer Pump complies with the provisions of Directive 98/37/EG

Applied Standards:

EN 292-1 Safety of Machinery - Basic Concepts, General Principles and Design - Part 1: Basic Terminology, Methodology

EN 292-2 Safety of Machinery - Basic Concepts, General Principles and Design - Part 2: Technical Principles and Specifications - Incorporates amendments 1 (1995) and 2 (1997)

EN 809 Pumps and Pump Units for Liquids - Common Safety Requirements

EN 982 Safety of Machinery - Safety requirements for fluid power systems and thier components - Hydraulics

Paul H. Conley

St. Louis, MO 10/23/01, Paul Conley, Chief Engineer

Americas:
One Lincoln Way
St. Louis, MO 63120-1578
USA
Phone +1.314.679.4200
Fax +1.800.424.5359

Europe/Africa:
Heinrich-Hertz-Str 2-8
D-69183 Walldorf
Germany
Phone +49.6227.33.0
Fax +49.6227.33.259

Asia/Pacific:
25 Int'l Business Park
#01-65 German Centre
Singapore 609916
Phone +65.562.7960
Fax +65.562.9967

Web site:
www.lincolnindustrial.com